INSURV CC-Deck EOC: System Rollup

		Comm-Band Score	Weight Vectors	Comm-Band EOC
RF-Dist Layer	HF		0.125	
	VHF		0.05	
	UHF LOS		0.15	
	UHF SAT		0.125	
	EHF		0.2	
	SHF		0.2	
	INMARSAT		0.05	
	GBS		0.1	
	Total		1.00	

Switching & Distribution

Terminals and Applications

EXCOM EOC

The system rollup for the CC-deck EOC is a rollup from the subsystem EOC's on the subsystem and component EOC's contained in the "Subsystem&Component" tab. For the RF layer, the subsystem EOC scores are combined with a weighted sum. The appropriate set of weights are obtained by applying decision rules from the "SATCOM configuration summary" block in the "Subsystem&Component EOCs" tab the excel "LOOKUP" function. The "LOOKUP" function selects the appropriate weight from the "RF-LayerWeightVectors" tab.

INSURV CC-Deck EOC: Components and Subsystems

SATCOM-Suite Config Summy	
EHF?	Y
SHF?	y
GBS?	y
Weight Vector	1

RF-Distribution Layer			Qty Installed	Qty INOP/ Degraded	Compnent EOC	System EOC	Description of EOC-Degradation Factors
RF Line-of-Sight Comms	HF	Receivers					
		Transmitters					
		Couplers TX					
		Couplers RCV					
		Antennas					
	VHF	Tranceiver					
		Couplers					
		Antennas					
		Portable Comms					
	UHF-LOS	Tranceivers					
		Couplers					
		Antennas					
	EMI/EMC	IMI (*enter max prod*)			1		
		RFR Hazards					
		EMI Survey					
atellite Comms	UHF SAT (SSR-1)	Application					
		Modems					
		Amplifiers					
		Antennas					
	UHF SAT	Application (DAMA)					
		Transceivers					
		Amplifier					
		Antennas					
		Pedestals					
	EHF	MDR Modems					
		LDR Modems					
		Amplifiers					
		Antennas					
		Pedestals					
	SHF	Modem					
		Amplifier					

INSURV CC-Deck EOC: Components and Subsystems

			Qty Installed	Qty INOP/ Degraded	Compnent EOC	System EOC	Description of EOC-Degradation Factors
S		Antennas					
		Pedestals					
	INMARSAT	Modem					
		Amplifier					
		Antenna					
		Pedestals					
	GBS	Video IRD					
		LNB					
		Antenna					
		Pedestals					
Switching & Distribution		Black-Side Switches					
	Crypto's	KG-84's					
		KY-58's					
		USC-43's					
		KWR-46					
		TTY's					
		Red-Side Switches					
Terminals & Apps		NAVMACS					
		OTCIXS					
		TADIXS					
		Navy Order Wire					
		Voice Terminals					
		SSQ-88 QMS					
		AN/SSW-1 Link 4					
		AN/USQ-125 Link 11					

INSURV CC-Deck EOC: Weight Vectors for RF-Layer Subsystem Calculations

CC Exponential 0.75

	1	2	3	4	5
	With EHF, SHF, GBS	***With EHF, SHF***	***With EHF, GBS***	***EHF Only***	***No EHF/SHF***
HF	0.125	0.125	0.175	0.175	0.2125
VHF	0.05	0.05	0.075	0.075	0.125
UHF LOS	0.15	0.15	0.175	0.175	0.225
UHF SATC	0.125	0.125	0.15	0.15	0.2125
EHF	0.2	0.25	0.2	0.275	
SHF	0.2	0.25			
INMARSAT	0.05	0.05	0.125	0.15	0.225
GBS	0.1		0.1		
	1	**1**	**1**	**1**	**1**

INSURV CC-Deck EOC: Exemplary Component-EOC Criteria

Component/Sybsystem	Reference	Degradation Factor	Specified Range	Additional Comments
UHF/VHF Antennas				
Visual Inspection: Preservation	4400/1-B1 A-43	≤ 0.2	IAW MRC criteria	
Visual Inspection: Connector weatherproofing	4400/1-B1 A-43	≤ 0.2	IAW MRC criteria	
Mesure VSWR	4400/1-B1 A-43	0.1 per 0.7 dB out of spec	≤ 3.0 dB	
Time-domain reflectometry	Navy Std Test Proc 40711-3-002	1.0	IAW acceptable response curves contained in test procedure	
OA-9123 UHF Coupler				
Measure Insertion Loss	4400/1-B1 A-39	0.5 per 10% output power below 63%	Output power ≥ 63% applied input power	
AN/URC-93 UHF Link Tranceiver				
Measure xmit power out	4400/1-B1 A-1	0.1 per 8% below of spec limits	34 W minimum	
Measure xmit modulation parameters	4400/1-B1 A-1	0.25 per kHz out of spec	Freq deviation ≤ 4 kHz	
Measure receiver resonse	4400/1-B1 A-1	0.1 per 0.7 dB below spec	Receiver quieting ≥ 20 dB	
AN/WSC-3(V) UHF Tranceiver				
BITE Test	4417/32-61 S-1	0.10 x quantity failed BITE's		
Measure transmit power out	FTSC Procedure WSC3-002	0.1 per 8% below of spec limits	AM: 31.5 W minimum FM: 105 W ± 5 W	
Measure receiver sensitivity	FTSC Procedure WSC3-002	0.1 per 0.7 dB above spec	AM: -96 dBM FM: -97.5 dBM	
Measure modulation parameters	FTSC Procedure WSC3-002	- AM: 0.1 per 10% out of spec - FM: 0.3 per kHz out of spec	- AM modulation 85-95% - FM WB: 5.5 kHz ± 0.5 kHz - FM NB: 8 kHz ± 1.5 kHz	Reported by SESEF during performance test
Conduct performance test	4417/32-61 R-2	- 1.0 for unit fails to operate - 0.4 for mode failure (e.g., HAVEQUICK)		
HF Whip Antennas				

INSURV CC-Deck EOC: Exemplary Component-EOC Criteria

Component/Sybsystem	Reference	Degradation Factor	Specified Range	Additional Comments
Visual Inspection: Preservation	4400/1-B1 A-47R	≤ 0.2	IAW MRC criteria	
Visual Inspection: Connector weatherproofing	4400/1-B1 A-47R	≤ 0.2	IAW MRC criteria	
Mesure Insulation Resistance	4400/1-B1 A-47R	(Measured value/100 MΩ)²	≥ 100 MΩ	
Time-domain reflectometry	Navy Std Test Proc 40711-3-002	1.0	IAW acceptable response curves contained in test procedure	
HF Wire Antennas				
Visual Inspection: Connector weatherproofing	4400/1-B1 S-68	≤ 0.2	IAW MRC criteria	
Mesure Insulation Resistance	4400/1-B1 S-68	(Measured value/100 MΩ)²	≥ 100 MΩ	
AN/GRC-211 VHF Tranceiver				
Measure Xmit power out	4415/1-41 S-2	0.1 per 8% below of spec limits	25-32 Watts	
Measure receiver sensitivity	4415/1-41 S-2	0.1 per 0.7 dB above spec	-113 dBm	
Measure modulation parameters	4415/1-41 S-2	- 0.1 per 0.1 Hz out of spec	- xmit freq deviation ≤ 0.5 Hz	
URT-23 HF Xmitter				
Measure Freq Accuracy	4413/4-51 S-5R			
Meaure Transmitter Pwr Out	4413/4-51 S-5R	0.1 per 8% below of spec limits	850 - 1250 W	
Meaure Intermod Distortion	4413/4-51 18-M7			
R-2368 HF Receiver				
Measure Receiver Sensitivity	4414/10-41 A-1			
Measure AGC	4414/10-41 A-1			
AN/SRA-49 HF Coupler				
Measure Insertion Loss	4400/1-B1 A-4			
AN/USC-38 SHF SATCOM				

INSURV CC-Deck EOC: System Reference Model

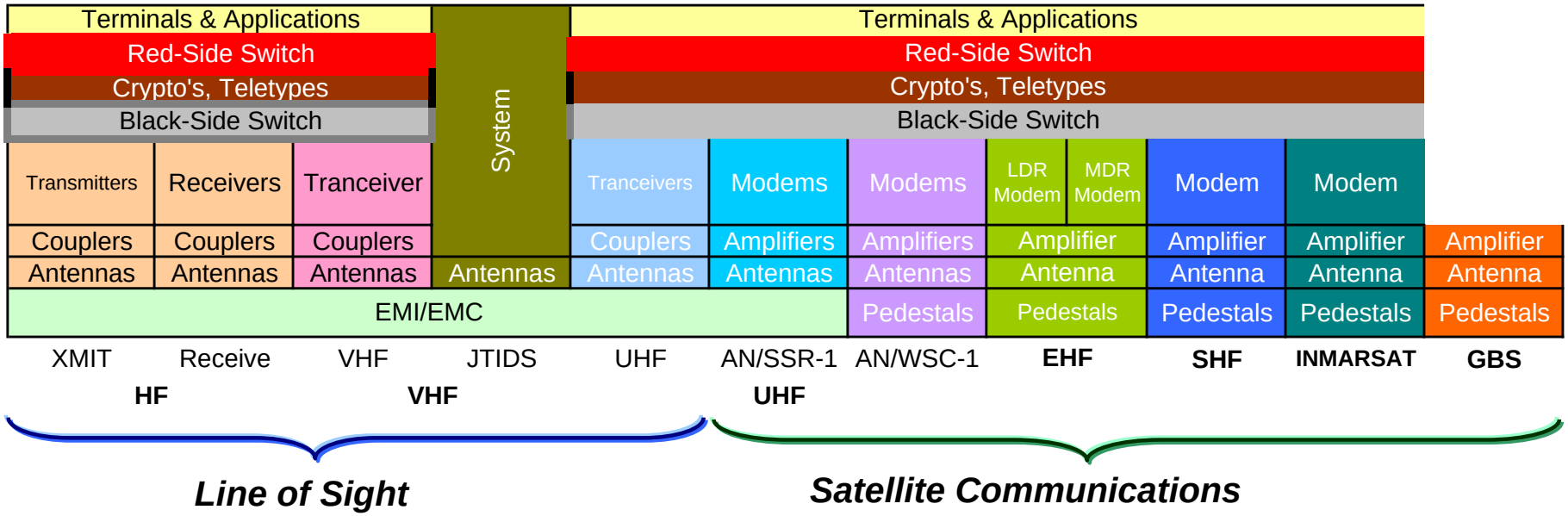

INSURV CC-Deck EOC
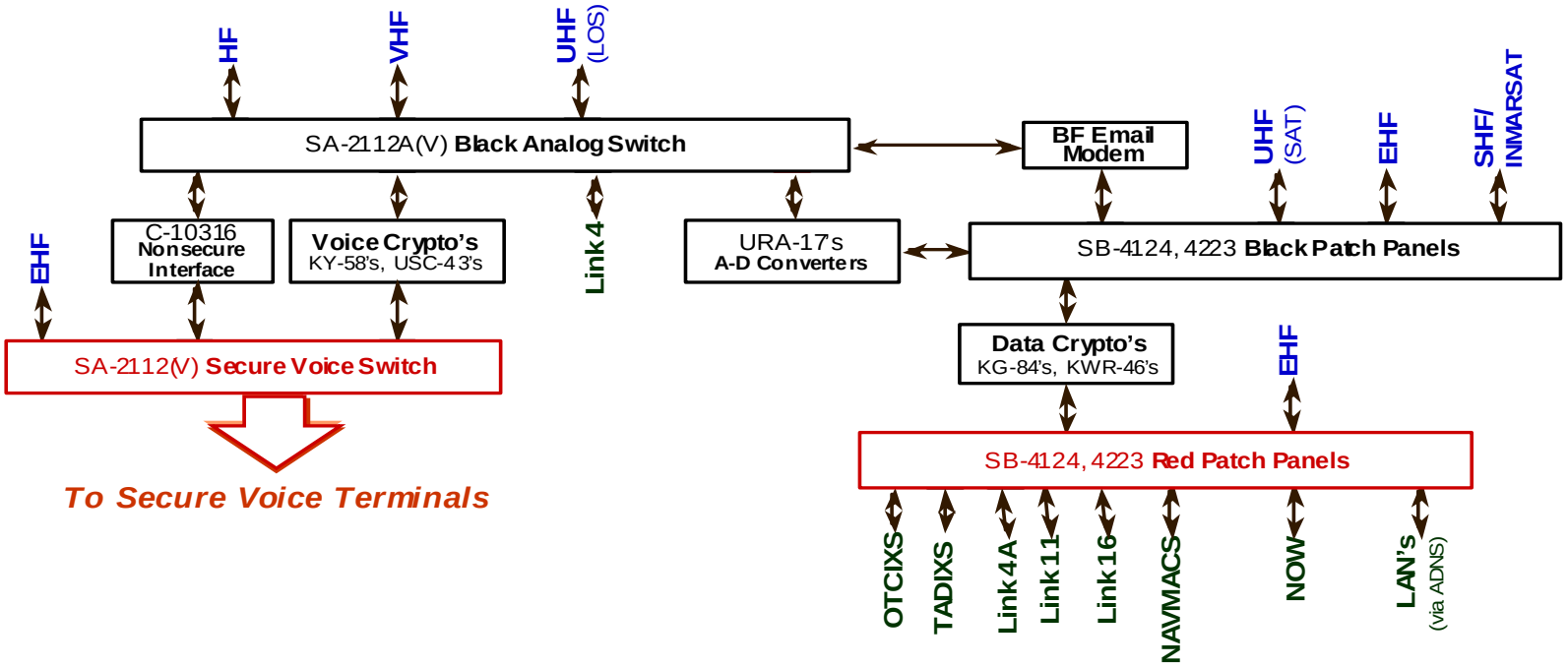
Notional Switching-and-Distribution Layer